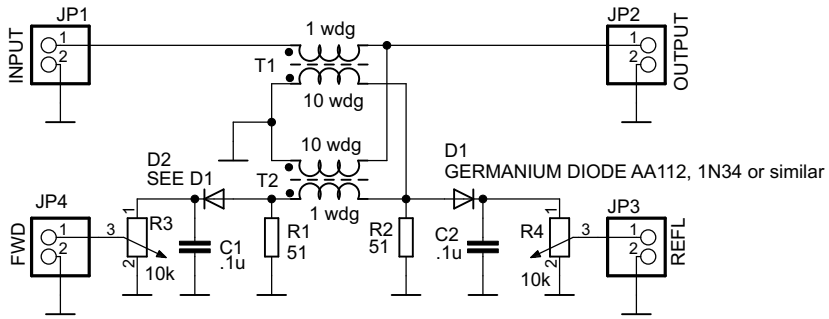

T1 = T2 = 1 wdg. primary , 10 wdg. secondary
AMIDON FT37-43

INSTRUMENT SENSITIVITY APPROX. 100µA

DL6MBI	QRP VSWR BRIDGE
	VSWR METER
	04.07.2011 12:34:06
	Sheet: 1/1